HIPPODROME THEATRE
SIGNAL FLOW PLOT
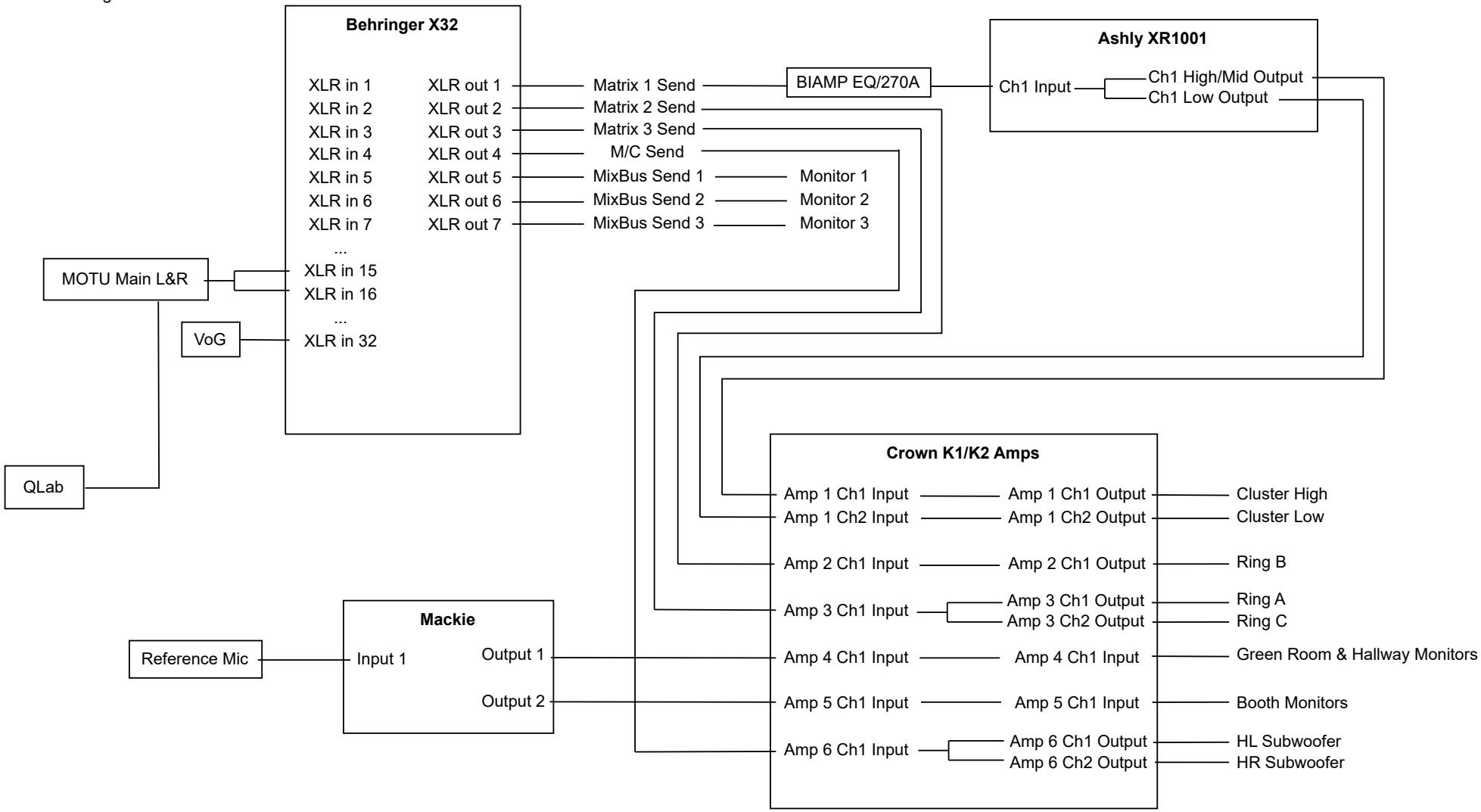
Sound Engineer: Zixia Li